PROFESSIONAL WEATHER STATION (WIND AND AIR PRESSURE)

Operation Manual

About this manual

Thank you and congratulations on selecting this professional weather station! We are positive you will enjoy the benefits of accurate weather readings and the precise radio controlled time information that our instruments offer.

This manual will guide you step-by-step through setting up your device. Use this manual to become familiar with your professional weather station, and save it for future reference.

Glossary of Common Terms

DCF/WWVB/MSF

The DCF, WWVB or MSF time signal is an AM modulated time-of-day signal broadcasted by the Federal Government of Germany, NIST from USA or National Physical Laboratory. The time base is generated from an atomic time generator which is accurate to 10 billions of one second.

LCD

“LCD” is an acronym for ”Liquid Crystal Display”. This is a common type of display screen used in televisions, computers, watches, and digital clocks.

BAROMETER & BAROMETRIC PRESSURE

A barometer is a device that measures the pressure of the air pushing on it—this measurement is called the barometric pressure. We don’t actually feel the barometric pressure because the air pressure is pushing equally in every direction.

RELATIVE AIR PRESSURE

Relative air pressure is the same as the barometric pressure. The calculation of relative air pressure is a combination of the absolute air pressure and the altitude.

ABSOLUTE AIR PRESSURE

Absolute air pressure is the actual air pressure on the barometer without regard to altitude.

INCHES OF MERCURY (inHg)

Inches of Mercury is the common unit of measurement for air pressure in the

www.signatrol.com

United States.

HECTOPASCALS (hPa)

Hectopascals are the common units of measurement for air pressure in the International System (SI) of measurement. The hectopascal holds the same value

Important Note:

The Professional weather station includes a base station (receiver), a transmitter unit, one wind direction sensor, one wind speed sensor, one rain gauge, USB cable and a PC software package on CD-ROM.

An added feature of the Weather Station is the readout of all measured and displayed time and weather data on a PC.

LCD display

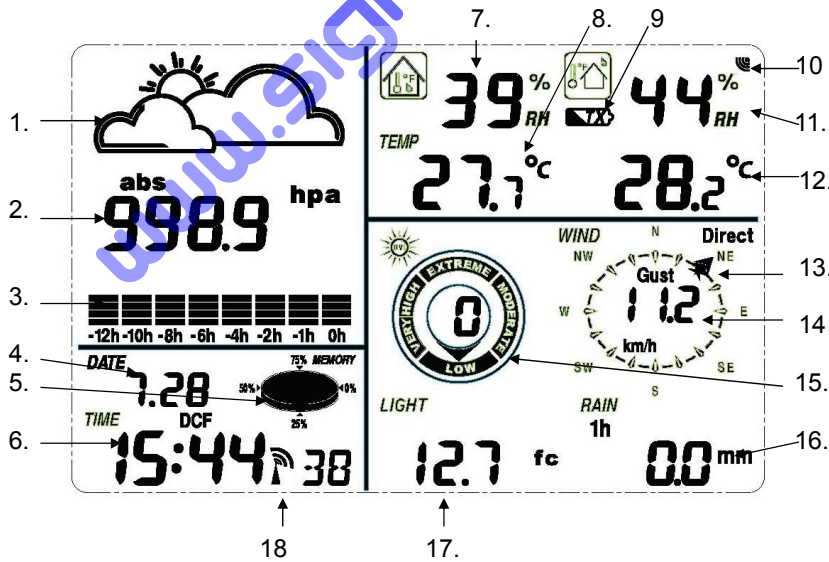

www.signatrol.com

1. Weather Forecast
2. Barometric Pressure
3. Barometric trend
4. Date
5. Memory
6. Time
7. Indoor Humidity
8. Indoor Temperature
9. transmitter low battery indicator
10. Outdoor reception signal
11. Outdoor Humidity
12. Outdoor Temperature
13. Wind direction
14. Wind speed/Gust
15. UV index
16. Rainfall
17. Light
18. Radio Controlled Clock (RCC)

Note: The presence of the "Alarm-On icon" in the section means that the particular alarm has been enabled.

www.signatrol.com

Set up Guide

Before placing and installing all components of the weather station at there final destination, please set up the weather station with all parts being nearby for testing the correct function.

Setting up the base station and transmitter

Setting up using batteries:

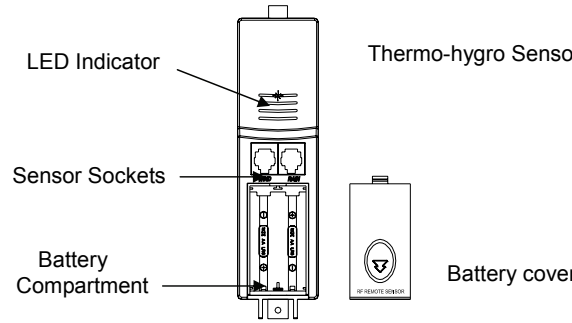

1) Insert 2XAA 1,5V alkaline rechargeable batteries first into the battery compartment of the remote sensor and immediately afterwards 3XAA 1,5V alkaline batteries in the base station, observing the correct polarity. When battery is first inserted, the red LED light on the remote sensor will be light up for 3-4 seconds. (If no LED light up or is lighted permanently, make sure the battery is inserted the correct way or a proper reset is happened)

2) When the base station is powered up, the LCD display activates for 3 seconds and after the “Beep”, it begins measuring indoor temperature, humidity and air pressure. The unit then enter the RF(Radio Frequency) state, where it receives data from the remote sensor and RCC(Radio Controlled Clock) receiving state at the same time. During radio controlled time reception period, there is no transmission and normal transmission will only resume after time reception routine is complete. The longest time for radio controlled time reception is 5 minutes.

RF (Radio Frequency) Receiving Mode

1. After power-on, the weather station enters RF receiving state for 144s.

2. Base station receive the temperature, humidity, wind speed and rain data each 48s, receive illuminance date each 60s. If there is no new effective signal from the sensor in constance receiption failure 8 times, the outdoor temperature and humidity will display “----”. The base station will start search the new remote sensor signal for 144s.

3. Hold the “▼” key for 4s to enter manual RF receiving state.

4. Do not press any key before outdoor sensor data received, otherwise the outdoor sensor learning mode will be terminated. When outdoor transmitter has been registered, the base station will automatically switch to the normal display mode from which all further settings can be performed by the user.

5. If there is no temperature reading in the indoor station, make sure the units are within range of each other or repeat the battery installation procedure.

RCC (Radio Controlled Clock) Receiving Mode

1. After the thermo-hygro sensor is powered up, the sensor will transmit weather data for 24s, and then the sensor will start radio controlled time reception. During the RCC time reception period (maximum 5 minutes), no weather data will be transmitted.

2.If no RCC signal is detected in the initial setup, the thermo-hygro sensor will try once every hour to get an RCC signal until a signal is received. Once the sensor receives the RCC signal it will transmit the signal to the base station, the received time and date will overwrite the manually set time and date, on the base station the RCC icon will be displayed. If the base station doesn’t receive the RCC signal or loses the signal the RCC icon will not be display.

3. **If your time zone is not at UTC+1:00, then manually set the time zone so that your clock time will be updated correctly after radio controlled time is received.**

www.signatrol.com

4. The best condition for reception is at night, between midnight and 6:00am – when there is less atmospheric interference.

Note:

Commonly the radio communication between receiver and transmitter in the open field can reach a distance of up to 330 feet providing that there are no interfering obstacles such as buildings, trees, vehicles, high voltage lines, etc.
Radio interferences such as PC screens, radios or TV sets can, in bad cases, entirely cut off radio communication. Please take this into consideration when choosing standing or mounting locations.

Mounting the sensor

Important Notes:

On the edge of wind direction sensor, there are four alphabet letter of "N","E","S"and "W" representing for the direction of North, East, South and West. Wind direction sensor has to be adjusted so that the directions on the sensor are matching with your real location. Permanent wind direction error will be introduced when the wind direction sensor is not positioned correctly during installation.

www.signatrol.com

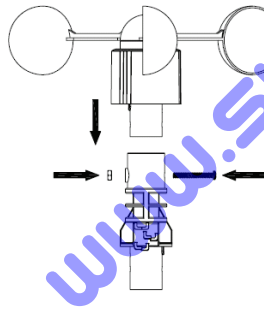

1

Anemometer

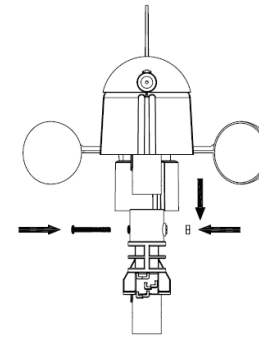

2

wind direction sensor

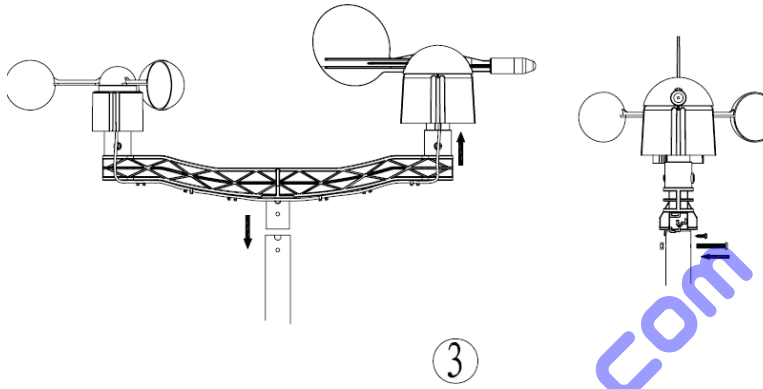

Mounting the dual wind sensor holder

www.signatrol.com

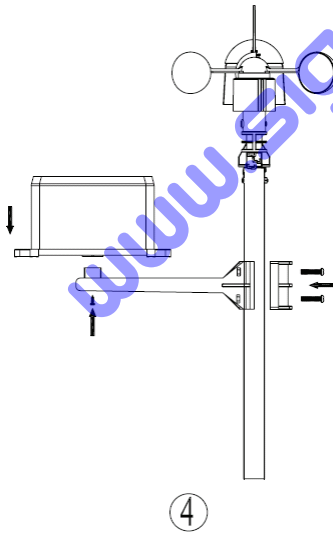

Mounting the rain sensor

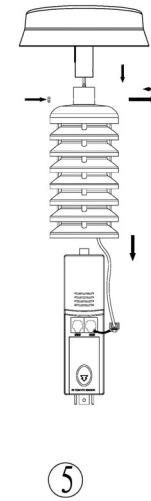

Thermo-hygro sensor with solar panel

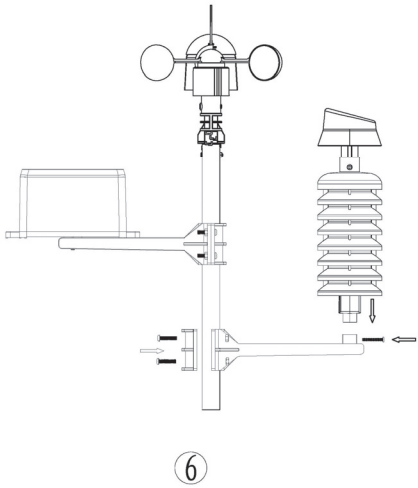

Mounting the thermo-hygro sensor same as rain sensor

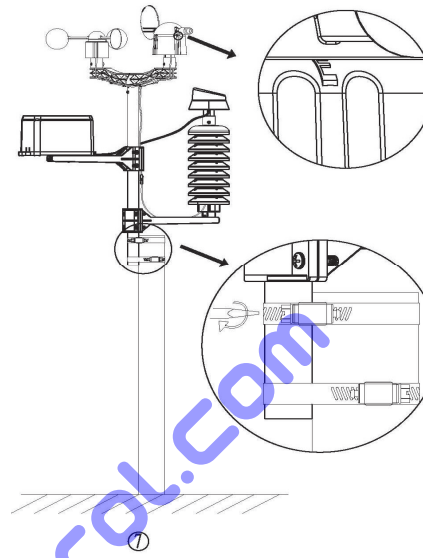

Fix the whole set to a pole with the two adjustable hoops.

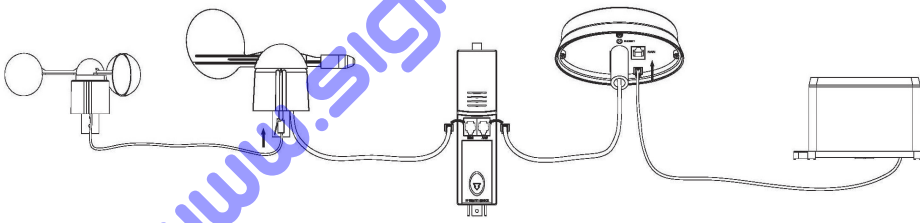

www.signatrol.com

- The anemometer's cable is connected to the input on the wind direction sensor.
- The wind direction sensor's cable is connected to the input marked **Wind** on the thermo-hygro sensor
- The rain sensor's cable is connected to the input marked **Rain** on the solar panel
- The solar panel's cable is connected to the input marked **Rain** on the thermo-hygro sensor.

The solar transmitter

The solar transmitter makes use of solar energy to power the instruments they are connected to.
Note: It use AA size alkaline rechargeable batteries. For the solar transmitters to function properly, make sure the solar receptors on the transmitters are exposed to sunlight and the connectors of the connection cable are securely plugged in.

For best results, direct solar panel as follows:
Solar panel facing north if you reside in the southern hemisphere; Solar panel facing south if you reside in the northern hemisphere.

Positioning

Once you have verified that all of the components of the weather station are working, they can be positioned in their permanent places. Before permanently mounting, make sure that all components work properly together at their chosen mounting or standing locations. If e.g. there appear to be problems with the 433 MHz radio transmission, they can mostly be overcome by moving the mounting locations.

Program Mode

The base station has six keys for easy operation: **MENU** key, ▲(**UP**) key, ▼(**DOWN**) key, **ENTER** key, **HISTORY** key, **ON/OFF** key

Note: Because of the default settings already determined by the manufacturer it may not necessary for the majority of user to perform-except the relative pressure(see further down)-any further basic settings and changes, however, can be easily made.

Note: Keeping the ▲(**UP**) or ▼(**DOWN**) key depressed when setting certain units in the manual setting mode will increase/decrease digits in greater steps. The setting procedure can be exited at any time by either pressing the **HISTORY** key or waiting for the 30-second time-out to take effect.

The basic settings can now be performed in the following order:

Time

- Press the **MENU** key to select the TIME section, TIME section digits will start flashing. Enter LCD contrast setting mode (level 0-8, default level 5), press the ▲(**UP**) or ▼(**DOWN**) key to set the value.

- Press the **ENTER** key to select the following modes:

- Time zone
  Note: At Europe, 0 for GMT+1 time zone, 1 for GMT+2 time zone, -1 for GMT time zone.
  At America, -4 for Atlantic time zone, -5 for Eastern Time zone, -6 for Central Time Zone, -7 for Mountain Time zone, -8 for Pacific time zone, -9 for Alaska time zone, -10 for Hawaii time zone.

www.signatrol.com

- 12/24h time display select (default 12 hours)
- DST ON/OFF (this function is only available for WWVB version, while for DCF version this feature is not activated)
- Manual time setting (hours/minutes)

Press the ▲ (**UP**) or ▼ (**DOWN**) key to set the value.

Note: Press **ON/OFF** key to set the DST ON/OFF. “DST OFF” indicates that the feature is off and the internal real time clock will not change times automatically. “DST ON” indicates that the feature is on and the internal real time clock will change times according to the DST time schedule automatically. Some locations (Arizona and parts of Indiana) do not follow Daylight Saving Time, and should select “DST OFF”.

Date

- Press the **MENU** key twice to select the DATE section, DATE section digits will start flashing. Enter DD-MM-SECOND/DD-MM-WEEK/Time alarm display mode. (Default DD-MM-SECOND format), press the ▲ (**UP**) or ▼ (**DOWN**) key to select the display mode.

- Press the **ENTER** key to select the following modes, press the ▲ (**UP**) or ▼ (**DOWN**) key to set the value:

- Select DD-MM or MM-DD format. (Default DD-MM format)
- Calendar setting (year/month/date)
- Time alarm setting. (Hours/minutes). Press the **ON/OFF** key to on/off the alarm. If alarm is enabled, an alarm symbol appears in the display indicating the alarm function has been enabled.

Note: When a set weather alarm condition has been triggered that particular alarm will sound for 120 seconds. The corresponding value, ‘HI AL” or “LO AL” and the alarm symbol are flashing until the weather condition doesn’t meet the user set level. Press any key to mute the alarm.

Pressure history bar graph

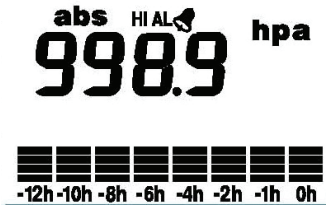

www.signatrol.com

- Press the **MENU** key the third time to select the PRESS HISTORY section, PRESSURE HISTORY section digit will start flashing. Press the ▲(**UP**) or ▼(**DOWN**) key to select the bar graph time scale between 12hrs and 24 hrs for pressure history.

Press

- Press the **MENU** key the fourth time to select the PRESSURE section, PRESSURE section digits will start flashing. Enter the pressure display mode (relative and absolute pressure. Default absolute pressure), press the ▲(**UP**) or ▼(**DOWN**) key to select the display.

- Press **ENTER** key to select the following modes, then press the **UP/+** or ▼(**DOWN**) key to select the display or set the value:

- Select pressure unit between hPa, mmHg, inHg. (Default hPa).
- The relative pressure setting. (If select absolute pressure display, skip this step)
- The pressure high alarm setting. Press the **ON/OFF** key to on/off the alarm. If alarm is enabled, an alarm symbol appears in the display indicating the alarm function has been enabled
- The pressure low alarm setting. Press the **ON/OFF** key to on/off the alarm. If alarm is enabled, an alarm symbol appears in the display indicating the alarm function has been enabled
- Reset the maximum pressure value. When both the pressure value and MAX icon are flashing, hold the **ENTER** key for 3s, the maximum pressure value will be reset to current reading.
- Reset the minimum pressure value. When both the pressure value and MIN icon are flashing, hold the **ENTER** key for 3s, the minimum pressure value will be reset to current reading.

Weather forecast tendency

- Press the **MENU** key the fifth time to select the TENDENCY section, TENDENCY section digits will start flashing. Enter the weather forecast tendency display mode(SUNNY, PARTLY CLOUDY, NIGHT, CLOUDY, RAINY and SNOW icon), press the ▲(**UP**) or ▼(**DOWN**) key to select the display.

- Press **ENTER** key to select the following modes, then press the ▲(**UP**) or ▼(**DOWN**) key to select the display or set the value:

- Set the pressure threshold from 2-4hPa(default 2hPa)
- Set the storm threshold from 3-9hPa(default 4hPa)

www.signatrol.com

Weather forecast symbol:

Sunny

Partly Cloudy

Cloudy

Rainy

Snow

Storm

Snowstorm

Clear Night

Cloudy Night

www.signatrol.com

For every sudden or significant change in air pressure, the weather symbols will update accordingly to represent the change in weather.

Notes to pressure sensitivity setting for weather forecasting:

The pressure threshold can be set to suit the user's requirement for weather forecasting from 2-4hPa (default 2hPa). For areas that experience frequent changes in air pressure requires a higher hPa setting compared to an area where the air pressure is stagnant. For example if 4hPa is selected, then there must be a fall or rise in air pressure of at least 4hPa needed to change the weather forecast

icons.

Notes to storm threshold setting

The storm threshold means the weather icons (rain and clouds) will begin to flash indicating a dramatic change in pressure, indicating a storm. Similar to the general pressure sensitivity setting it is possible to adjust the storm threshold sensitivity form 3-9hPa (default 4hPa). When there is a fall over pressure threshold within 3 hours, the storm forecasting will be activated, the clouds with rain icon and tendency arrows will flash for 3 hours indicating the storm warning feature has been activated.

Indoor humidity

- Press the **MENU** key the sixth time to select the INDOOR HUMIDITY section, INDOOR HUMIDITY section digits will start flashing. Enter the indoor humidity high alarm setting mode, press the **ON/OFF** key to on/off the alarm. If alarm is enabled, an alarm symbol appears in the display indicating the alarm function has been enabled

- Press **ENTER** key to select the following modes:

- The indoor humidity low alarm setting. Press the **ON/OFF** key to on/off the alarm. If alarm is enabled, an alarm symbol appears in the display indicating the alarm function has been enabled
- Reset the maximum indoor humidity value. When both the indoor humidity value and MAX icon are flashing, hold the **ENTER** key for 3s, the maximum indoor humidity value will be reset to current reading.
- Reset the minimum indoor humidity value. When both the indoor humidity value and MIN icon are flashing, hold the **ENTER** key for 3s, the minimum indoor humidity value will be reset to current reading.

Indoor temperature

- Press the **MENU** key the seventh time to select the INDOOR TEMPERATURE section, INDOOR TEMPERATURE section digits will start flashing. Enter the temperature unit mode, press the ▲(**UP**) or ▼(**DOWN**) key to select temperature unit between ℃ and ℉

- Press **ENTER** key to select the following modes:

- The indoor temperature high alarm setting. Press the **ON/OFF** key to on/off the alarm. If alarm is enabled, an alarm symbol appears in the display indicating the alarm function has been enabled

www.signatrol.com

- The indoor temperature low alarm setting. Press the **ON/OFF** key to on/off the alarm. If alarm is enabled, an alarm symbol appears in the display indicating the alarm function has been enabled
- Reset the maximum indoor temperature value. When both the indoor temperature value and MAX icon are flashing, hold the **ENTER** key for 3s, the maximum indoor temperature value will be reset to current reading.
- Reset the minimum indoor temperature value. When both the indoor temperature value and MIN icon are flashing, hold the **ENTER** key for 3s, the minimum indoor temperature value will be reset to current reading.

Outdoor humidity

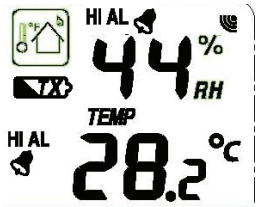

- Press the **MENU** key the eighth time to select the OUTDOOR HUMIDITY section, Procedures and settings are similar to Indoor humidity

Outdoor temperature

- Press the **MENU** key the ninth time to select the OUTDOOR TEMPERATURE section, OUTDOOR TEMPERATURE section digits will start flashing. Enter the outdoor temperature display mode, press the ▲(**UP**) or ▼(**DOWN**) key to Select the outdoor temperature display between Outdoor Temperature, Wind Chill and Dew Point.

- Press **ENTER** key to select the following modes:

- Temperature unit display. Press the ▲(**UP**) or ▼(**DOWN**) key to select the temperature unit between ℃ and ℉
- The outdoor temperature high alarm setting. Press the **ON/OFF** key to on/off the alarm. If alarm is enabled, an alarm symbol appears in the display indicating the alarm function has been enabled
- The outdoor temperature low alarm setting. Press the **ON/OFF** key to on/off the alarm. If alarm is enabled, an alarm symbol appears in the display indicating the alarm function has been enabled
- Reset the maximum outdoor temperature value. When both the outdoor temperature value and MAX icon are flashing, hold the **ENTER** key for 3s, the maximum outdoor temperature value will be reset to current reading.
- Reset the minimum outdoor temperature value. When both the outdoor temperature value and MIN icon are flashing, hold the **ENTER** key for 3s, the minimum outdoor temperature value will be reset to current reading.

www.signatrol.com

UV index

The UV intensity indicators is to show the UV intensity level from 0-12

UV Index
Very high : 10, 11, 12+
High : 7, 8, 9
Extreme : 5,6,
Moderate : 3, 4,
Low : 0, 1, 2

-Press the MENU key the tenth time to enter UV high alarm setting, Press the **ON/OFF** key to on/off the alarm. If alarm is enabled, an alarm symbol appears in the display indicating the alarm function has been enabled

- Press **ENTER** key to reset the maximum UV index value. When both the UV index value and MAX icon are flashing, hold the **ENTER** key for 3s, the maximum UV index value will be reset to current reading.

Wind

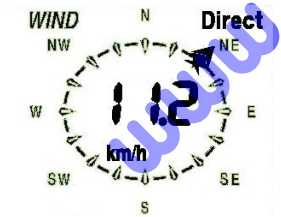

- Press the **MENU** key the eleventh time to select the WIND section, WIND section digits will start flashing. Enter average wind speed / Gust display mode. (Default average wind speed), press the ▲(**UP**) or ▼(**DOWN**)key to select the display mode.

- Press **ENTER** key to select the following modes, then press the ▲(**UP**) or ▼(**DOWN**) key to select the display or set the value:

- Select the wind speed unit between km/h, mph, m/s, knots, bft. (Default mph)
- The wind speed high alarm setting.
- The wind direction alarm setting.
- Reset the maximum wind speed value. When both the wind speed value and

www.signatrol.com

MAX icon are flashing, hold the **ENTER** key for 3s, the maximum value will be reset to current reading.

Note: Press the **ON/OFF** key to on/off the alarm. If alarm is enabled, an alarm symbol appears in the display indicating the alarm function has been enabled

Light

- Press the **MENU** key the twelfth time to select the LIGHT section, LIGHT section digits will start flashing. Enter the light unit mode, press the ▲(**UP**) or ▼(**DOWN**) key to select light intensity unit between FC and LUX

- Press **ENTER** key to select the following modes:

- The light high alarm setting. Press the **ON/OFF** key to on/off the alarm. If alarm is enabled, an alarm symbol appears in the display indicating the alarm function has been enabled
- Reset the maximum light value. When both the light value and MAX icon are flashing, hold the **ENTER** key for 3s, the maximum light value will be reset to current reading.

Rain

- Press the **MENU** key the thirteenth time to select the RAIN section, RAIN section digits will start flashing. Enter rain display mode (1h, 24h, week, month and total rain. Default 1h), press the ▲(**UP**) or ▼(**DOWN**) key to select the display.

- Press **ENTER** key to select the following modes, then press the ▲(**UP**) or ▼(**DOWN**) key to select the display or set the value:

- Select rain fall unit between mm, inch. (Default mm)
- The rain high alarm setting. Press the **ON/OFF** key to on/off the alarm. If alarm is enabled, an alarm symbol appears in the display indicating the alarm function has been enabled
- Reset the maximum rainfall value. When both the rain value and MAX icon are flashing, hold the **ENTER** key for 3s, the maximum rain value will be reset to current reading.
- Clear the total rainfall. When both the total rain value and CLEAR word are flashing, hold the **ENTER** key for 3s, the total value will be reset to zero. 1h, 24h, week, month rain value will be reset to zero automatically.

www.signatrol.com

Memory modes

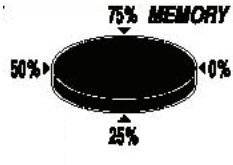

1) Press the HISTORY key to activate history data toggle display, Press ▼ (**DOWN**) key to toggle forward to see earlier weather history data together time stamp, press ▲(**UP**) key to see later history weather data. When history data displayed, the corresponding time will be displayed at the time section area (History data saving interval can only be changed using the PC software that comes with this product, the default history data saving time interval is preset to 30 minutes prior to shipment).
2) Press the HISTORY key again will trigger the memory clear procedure: the word of “CLE” will be flashing; the full memory usage icon will be flashing. Hold the ENTER key for 3 seconds will clear the memory.

Reset To Factory Default Settings

While in normal display, press and hold the ▲(**UP**) key for 20seconds to reset all settings to the manufacturer default settings.

PC Connection

As an important feature in addition to the display, the Weather Station allows the read-out of all measured and displayed time and weather data in form of complete history data sets on a PC.

Data Storage

For a comprehensive weather history, the Base Station allows the internal storage of up to 4080 complete sets of weather data with time and date. These data sets are being stored in non-volatile ring buffer memory (EEPROM) and will not be lost even in case of an interruption of power supply (e. g. change of batteries). In case the memory capacity of the Weather Station is exhausted the oldest data sets stored will be overwritten by the new ones entered.

Data Recall

Certain weather data or setting values can only be read out, processed, and displayed by means of a PC. Also the settings of the storing intervals from 5 minutes to 240 minutes for the storage of data sets can only be performed by means of a PC.

www.signatrol.com

Connections and Software

The wiring between Weather Station and PC takes place by means of an included USB cable. The EasyWeatherPlus software package, also included in the shipping contents, must be installed on the PC.

This software allows the display of all present weather data with graphic symbols. It also allows the display, storage, and printing of history data sets, whose volume exceeding the maximum 4080 data sets of the Weather Station is only limited by the capacity of the PC's main memory.

PC software installation

The installation of software is very simple: double click the setup.exe file and follow the steps popped up.

Make sure you are running the program under the administrator accounts of your windows PC platform. Otherwise the graphic function might not be working when graph display mode is needed to display all history data.

If you run the program for the first time, the current weather display will be displayed and at the sub line of the window, the program will show related information regarding the read of all history data into the PC. Please note however, when there is large amount of data is being uploaded, it will take a few minutes time before the system can respond to your setup settings. Otherwise it will display "read weather data fail" error message since the USB port is reading the data from the memory and the system is not able to respond any further job tasks.

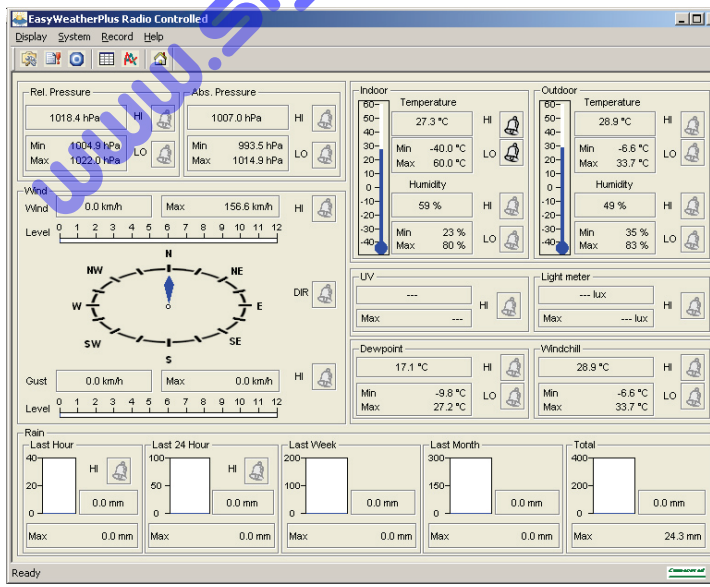

www.signatrol.com

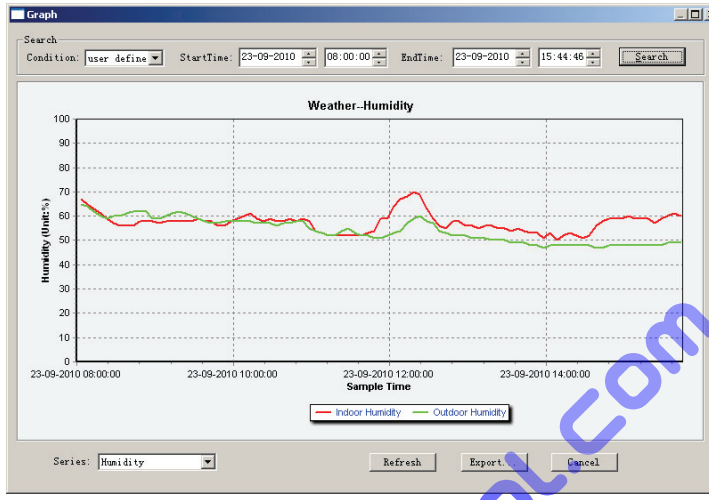

When memory is full, it will take about two minutes to upload all history data into PC and it takes another two minutes to process all history data for graphic display.

Specifications

Outdoor data

Transmission distance in open field	:	100m(330 feet)
Frequency	:	433 MHz
Temperature range	:	-40˚C--60˚C (-40℉ to +140℉)
Accuracy	:	+ / - 1 °C
Resolution	:	0.1˚C
Measuring range rel. humidity	:	10%～99%
Accuracy	:	+/- 5%
Rain volume display	:	0 – 9999mm (show --- if outside range)
Accuracy	:	+ / - 10%
Resolution	:	0.3mm (if rain volume < 1000mm) 1mm (if rain volume > 1000mm)
Wind speed	:	0-50m/s (0~100mph) (show --- if outside range)
Accuracy	:	+/- 1m/s (wind speed< 5m/s) +/-10% (wind speed > 5m/s)
Light	:	0-400K Lux
Accuracy	:	+/-15%

www.signatrol.com

Measuring interval thermo-hygro sensor	:	48 sec
Measuring interval UV sensor	:	60 sec
Measuing interval Light sensor	:	60 sec
Water proof level	:	IPX3

Indoor data

Measuring interval pressure / temperature	:	48 sec
Indoor temperature range	:	-10˚C--60˚C (14℉ to + 140℉) (show --- if outside range)
Resolution	:	0.1°C
Measuring range rel. humidity	:	10%～99%
Resolution	:	1%
Measuring range air pressure	:	300-1100hPa (8.85-32.5inHg)
Accuracy	:	+/-3hpa under 700-1100hPa
Resolution	:	0.1hPa (0.01inHg)
Alarm duration	:	120 sec

Power consumption

Base station	:	3XAA 1.5V LR6 Alkaline batteries (not included)
Remote sensor	:	2xAA Alkaline rechargeable batteries (included)
Battery life	:	Minimum 12 months for base station Minimum 24 months for thermo-hygro sensor

Remark: Be sure to use 1.5V rechargeable battery for solar transmitter.
Where outdoor temperature is lower than -20°C, make sure proper type of batteries to be used to assure that the device can get enough power to maintain its function properly. Normal alkaline batteries is not allow to be used since when outdoor temperature is lower than -20°C, the battery's discharging capability is greatly reduced.

Please help in the preservation of the environment and return used batteries to an authorized depot.

All rights reserved. This handbook must not be reproduced in any form, even in excerpts, or duplicated or processed using electronic, mechanical or chemical procedures without written permission of the publisher.

This handbook may contain mistakes and printing errors. The information in this handbook is regularly checked and corrections made in the next issue. We accept no liability for technical mistakes or printing errors, or their consequences. All trademarks and patents are acknowledged.

www.signatrol.com

EasyWeatherPlus PC Software User Manual

1.0 General Information

This Weather Station is a high quality, easy to use weather monitoring system that reads, displays and records the weather data from internal as well as external sensors. Besides the internally measured values for indoor temperature, indoor humidity and air pressure the outdoor sensor will take data for temperature and humidity, wind and rainfall. Operation of these units is by wireless transmission to the Base Station.

After installing the “EasyWeatherPlus” program on this CD-ROM, your PC can display all indoor data as well as the weather data from the Base Station received from the external sensors. For operation, simply use the USB cable supplied and connect the Base Station to the PC. From now on you can start to track current and history weather information at your finger tips.

www.signatrol.com

2.0 System Requirements

To install the "EasyWeatherPlus" software onto your PC, the minimum requirements are as follows:
Operating System: Windows NT4 (Service Pack >= 6a), Windows 2000, Windows XP, Windows Vista, Windows 7.
Internet Explorer 6.0 or above
Processor: Pentium III 500 MHz or above
Memory: at least 128MB, 256MB recommended
CD-ROM Drive
Base Station and PC must be connected by USB cable

3.0 Installation of the “EasyWeatherPlus” Software

Firstly, the Base Station and the Outdoor Sensors should be connected and checked for correct function (see **Operation Manual** for setting up the Weather Station). After successful checking, install the “EasyWeatherPlus” software as follows:

1. Switch on your PC and insert the CD-ROM into the CD-ROM Drive.
2. Double click “Setup.exe”
3. Select the installation process language option and click next
4. click next and select the destination folder(change directory when needed)
5. click next and the software will be installed automatically
6. press ok to finish the installation process
7. From “Start—All Programs—EasyWeahterPlus” path and the “EasyWeatherPlus” icon to start application.

Note: The graphic function needs the software to be installed under the administrator account. If it is installed under limited user accounts, the graphic function of the software might not be working correctly.

To run easyweather in windows7

Please note that enduser should run the easyWeatherPlus in windows7 as administrator:

1. Click “start” icon
2. Find easyWeatherPlus program and right click mouse
3. Click “run as administrator”

4.0 Basic Settings of the “EasyWeatherPlus” Software

After the “EasyWeatherPlus.exe” program has been started, the following main window will appear on the PC screen:

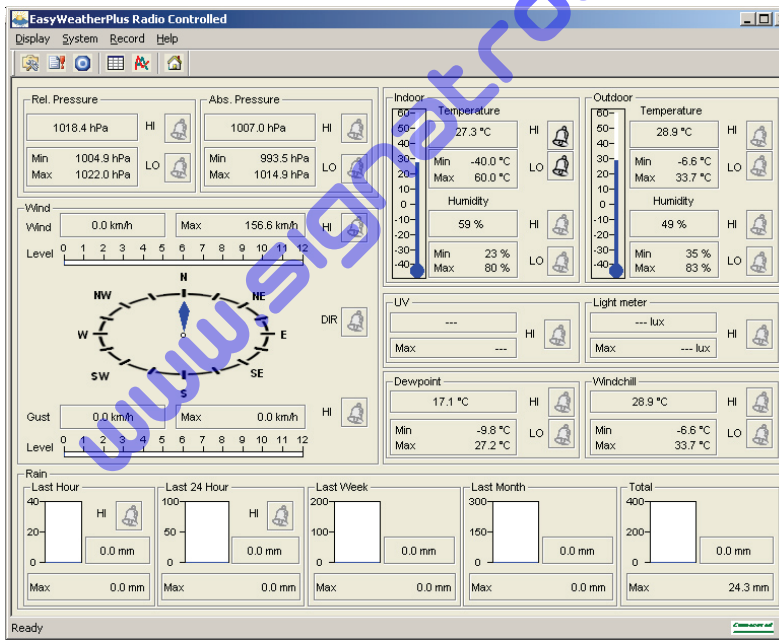

All the settings from the base unit is mirrored into the PC software, so once you have done your setting on the base unit, then you don’t need to make any setting changes on the PC software. However you can still easily make any setting changes you wanted from the PC and download the changes into the base station(the setting change will be refreshed when next full minute arrives on the base station).

www.signatrol.com

When base unit is connected to PC, the icon of will be displayed. If no base station is connected, the icon of will be displayed.

Function button:

: Display and setup system configuration

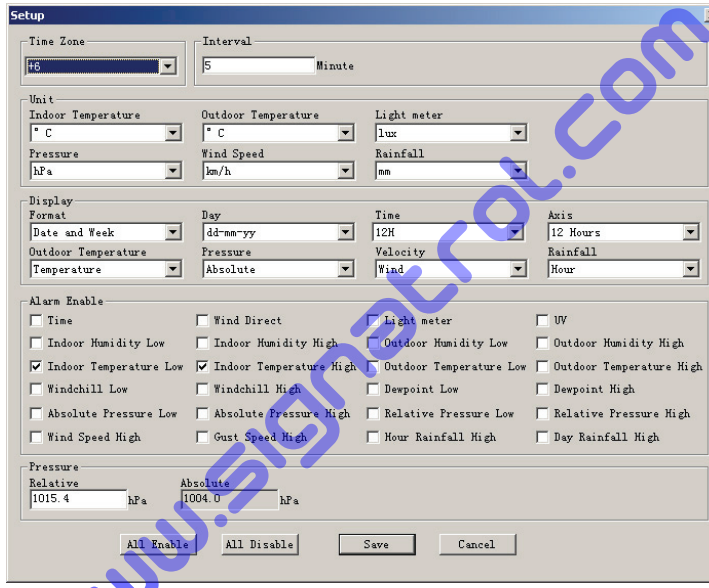

This section is used to set up PC software display, base station units, as well as able or disable the corresponding alarm function. Once you made your choice, press Save to make the setting effective.

www.signatrol.com

: Display and modify system alarm value

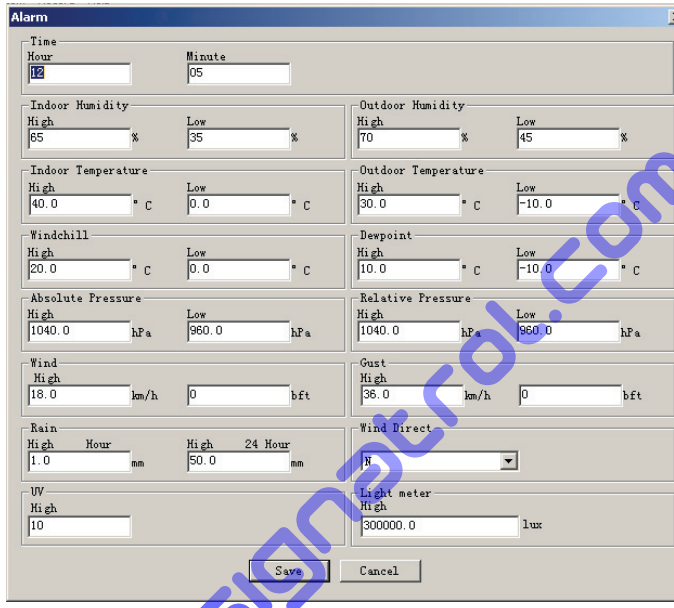

This section is used to set the desired time, high or low alarm value for the base unit. Once you made your choice, choose Save to make the setting effective. If you don't want to make any change, just press Cancel and exit without change.

www.signatrol.com

: Display min and max history value

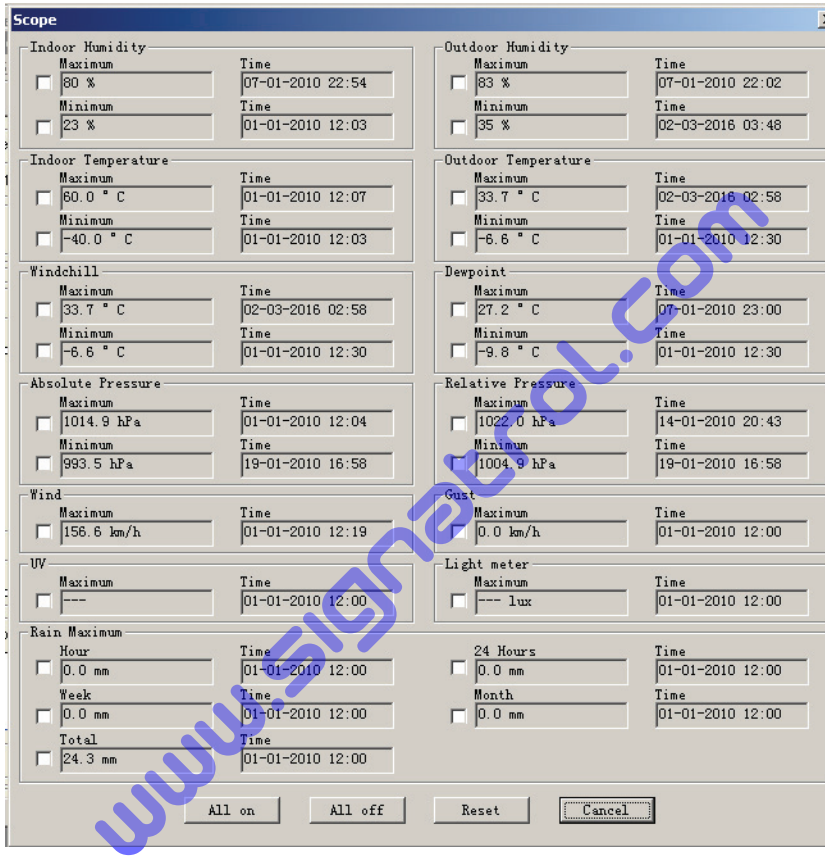

This section is used to display the recorded min and max value recorded with time stamp. Min/Max reset can only be done through key operation on the base station.

: display history detail data

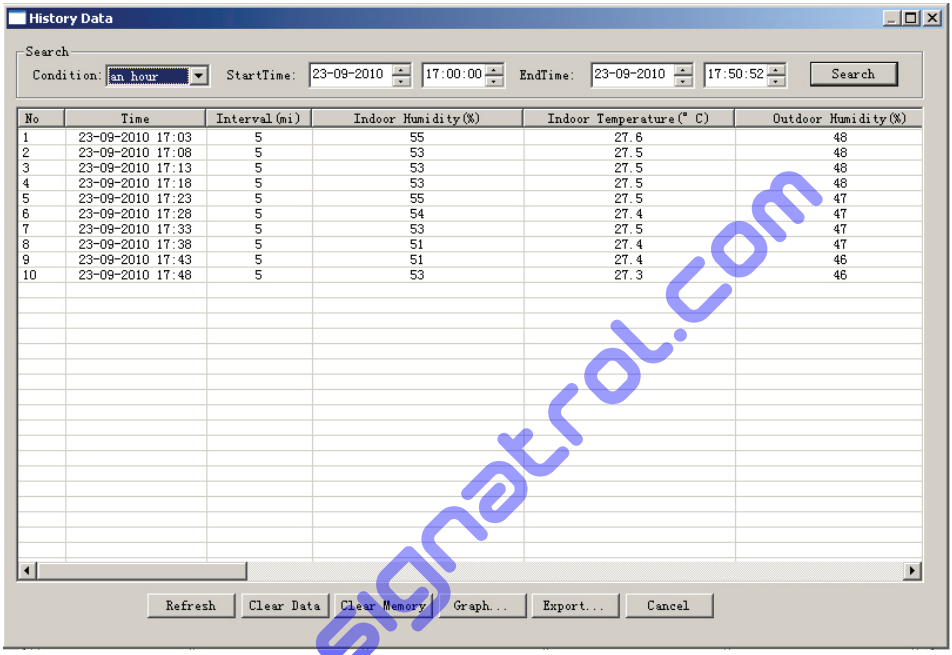

No	Time	Interval(mi)	Indoor Humidity(%)	Indoor Temperature(° C)	Outdoor Humidity(%)
1	23-09-2010 17:03	5	55	27.6	48
2	23-09-2010 17:08	5	53	27.5	48
3	23-09-2010 17:13	5	53	27.5	48
4	23-09-2010 17:18	5	53	27.5	48
5	23-09-2010 17:23	5	55	27.5	47
6	23-09-2010 17:28	5	54	27.4	47
7	23-09-2010 17:33	5	53	27.5	47
8	23-09-2010 17:38	5	51	27.4	47
9	23-09-2010 17:43	5	51	27.4	46
10	23-09-2010 17:48	5	53	27.3	46

www.signatrol.com

This section is used to display recorded history data in a spread sheet. If you wanted to see all history data in a desired time period, choose the time duration and press Search to reload the history data. With the Export button, you can export the selected history data into text format file for other application purpose.

When memory on base station is full, press “Clear Memory” button to refresh the memory space on the base station (remember to upload all data before pressing this button).

If you wanted to start a new weather history record, press “Clear Data” button to clear up the data base, all history weather data will be deleted (if you would like to keep a back up history file before deleting all weather data, you can make a copy of the “EasyWeatherPlus.dat” file into another folder or just rename the “EasyWeatherPlus.dat” file, such as “Jan-07.dat”, for future reference.

: display graph data

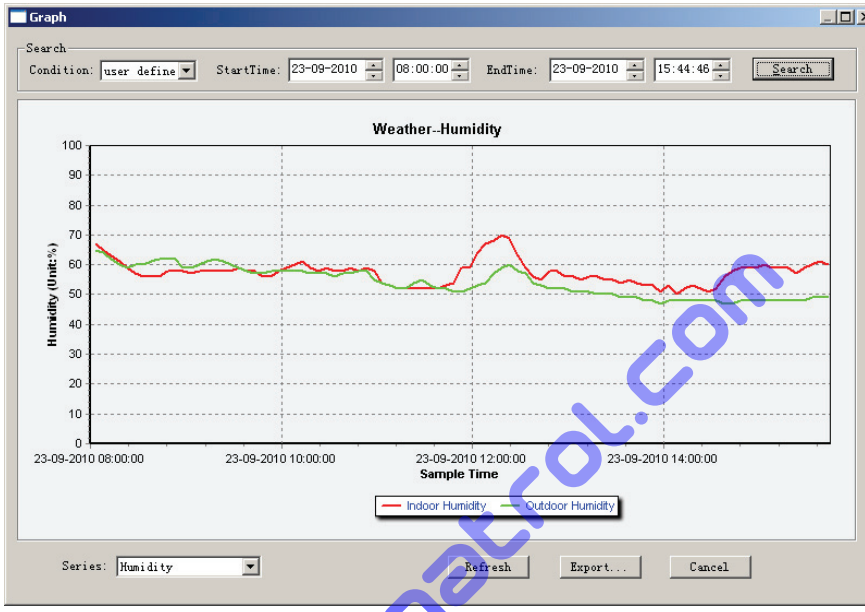

In this section, you can see the history data plotted in graph format for easier observation. If you want to see more details, just use your mouse to select the area you wanted and the display will be automatically updated in more detailed scale:

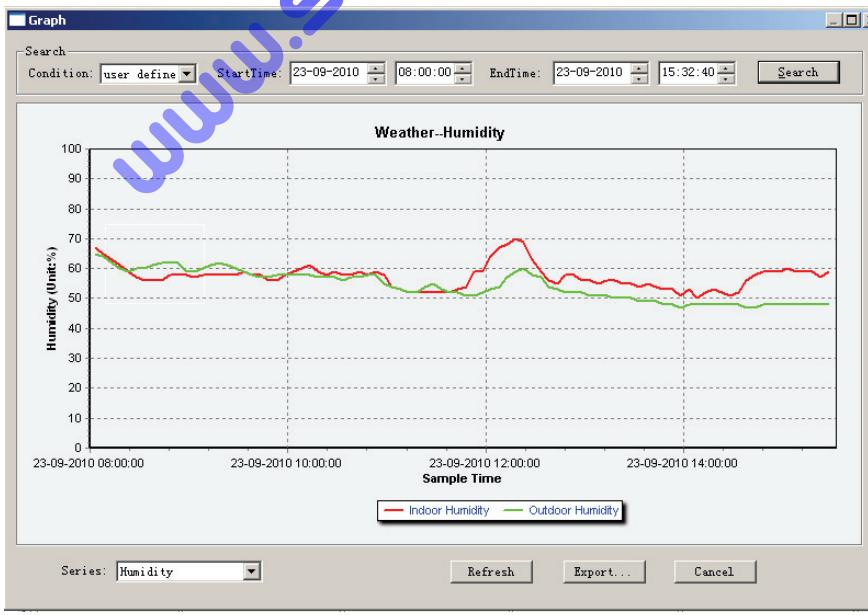

www.signatrol.com

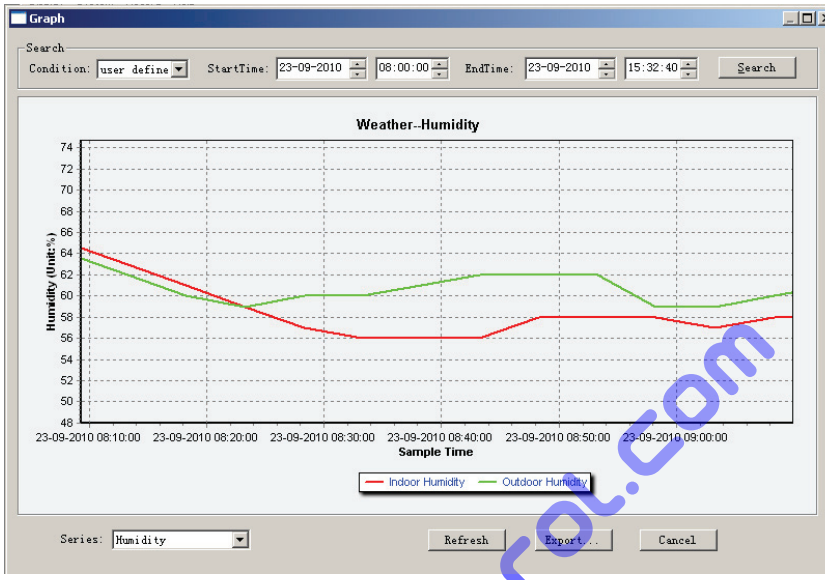

What to do if graph function is not working

This is the most encountered problem with this software. To make the graph function working properly, please check the following step:

1, find the folder where the “EasyWeatherPlus.exe” file is located
2. Create a file name “reg_graph.bat” file with wordpad or notepad editor program
3. type “regsvr32 easyweatherplus.ocx” and save the reg_graph.bat file
4. Double click “reg_graph.bat” file and it should register the graphic driver again. If successful, then the following window will be displayed:

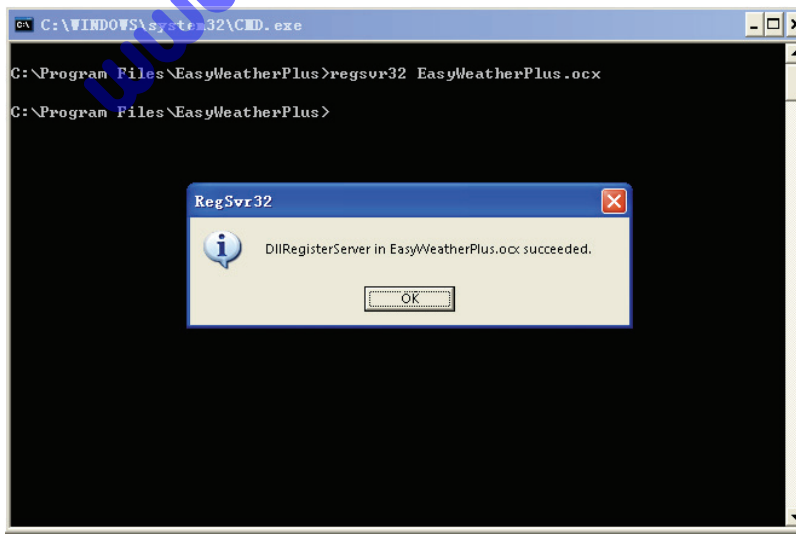

www.signatrol.com

Special Notes about time synchronization between PC and sub-station:

The PC software obtained its own time scale through the time interval marker from the base station history data, and the PC software automatically synchronizes the weather data with a time stamp calculated. Thus the history data file can have different time when the PC time and base station time is not same. In order to make the time scale correct, remember to set the PC time and base station time same, and further to this, no weather data is allowed to be missed or over-written. If history weather memory on the base station is cleared by manual setting, then the history weather data since last uploading is lost permanently.

Before memory is used up(memory icon on LCD display showing 100% full), remember to upload weather history data to PC periodically.

If there is a reset happened for the rain fall on the base station, then there will be rain fall value discrepancy between PC and base station.

Legal Notes

- We reserve the right to delete or change any image whether or not purposely uploaded onto the server by a user of the EasyWeather software products.
- The EasyWeather software products are protected by copyright laws and international copyright treaties as well as other intellectual property laws and treaties.
- You may not copy the printed materials accompanying the products.

www.signatrol.com